SOLTERRA
EV CHARGERS

CG SERIES CHARGER

MODEL:STTL600CG7208L



Solterra Technologies Private Limited designs and manufactures robust power electronics for electric mobility, traction and energy storage applications, offering on-board and off-board chargers, power modules, inverters, communication controllers and auxiliary DC-DC systems engineered for demanding environments. This compact 72V charger delivers 600W with 8A CP mode output, charging both lithium-ion and lead-acid battery packs. Its CP mode functionality shortens charging time for light electric vehicles and keeps fleets on the road.

The design incorporates active PFC and digital LLC control with forced-air cooling for sustained full-power operation. Reliable hardware with integrated prognostics and health monitoring is fully potted in silicone inside a sealed aluminium die-cast enclosure that resists vibration, shock, dust, chemicals and harsh commercial environments. It supports optional CAN bus integration for fleet management and uses adaptive charging algorithms, configurable for lithium-ion or lead-acid charge profiles, to maximise both charging speed and battery longevity.

MAIN ATTRIBUTES

Max Output Power	600W
Peak Efficiency	≥90%@220VAC
Voltage Range	16V to 60V 4A ; 60V ~ 88V CP
CP Mode Output Current	8A (peak)
MTBF	>150K Hours
Voltage Regulation	≤±0.2 Vdc
Current Regulation	≤±1% F.S.
Topology	Active PFC + Digital LLC ~ settable Voltage and Current limits.
Battery Type	Lead-acid and Lithium-ion (72V nominal)

AC INPUT ATTRIBUTES

AC Input Voltage Range	85VAC ~ 270VAC; 50/60Hz
Full Power Voltage Range	120 ~ 270VAC
Input Frequency	50/60Hz
Input Current	≤6A
Input Inrush	<2A
Power Factor	0.99@220VAC, full load
THDi	<5%
Input Surge Rating	L-N 4kV (1min interval)
Idle Consumption	<3W

PROTECTIONS

Input Under/Over Voltage	When the AC input voltage is lower than 85Vac, the charger stops working and an under-voltage alarm occurs; when the AC input voltage is higher than 270Vac, the charger stops working and an over-voltage alarm occurs.
Input Overcurrent	The charger reduces the output power to ensure that the input over current (active monitoring) thresholds are not breached.
Output Over Voltage	If output voltage exceeds the internal OV threshold, the charger immediately cuts the output relay and gives an alarm.
Output Overcurrent	If load current exceeds the internal OC limit, the charger immediately cuts the output relay and gives an alarm.
Output Short Circuit	If the output is short-circuited, the charger shuts down output with current limit and an alarm is issued.
Output Reverse Polarity & No Load Protection	If the battery is connected in reverse, the charger shuts down output and alarms (reverse polarity protection not active during Activation mode). If battery voltage is missing or <⅓ of rated pack voltage, the charger alarms and gives no output.
Automatic Shutdown	If charging time or charging end voltage exceeds the internal maximum limit, it stops charging and alarms.
Over Temperature Protection	If internal or ambient temperature goes above the set value, it first reduces current (derating), then stops and alarms; charging resumes automatically when temperature falls to the recovery point. With an external probe, it can also monitor battery/ambient temperature.

FEATURES

CANbus 2.0B upto 1000Kbps / RS485 (optional). FW Update via CANbus
Auxiliary power 12V/0.2A
Dry Switch Interlock 1A
Deep Discharge Recovery (without reverse polarity protection)

SAFETY

Isolation Levels (Input - Output)	<10mA 2000Vac 60s
Isolation Levels (Input - Shell)	<10mA 2000Vac 60s
Isolation Levels (Output - Shell)	<10mA 1000Vac 60s
Insulation resistance	>10MΩ (500VDC)
Drop Resistance	1m height

OUTPUT VOLTAGE VS CURRENT

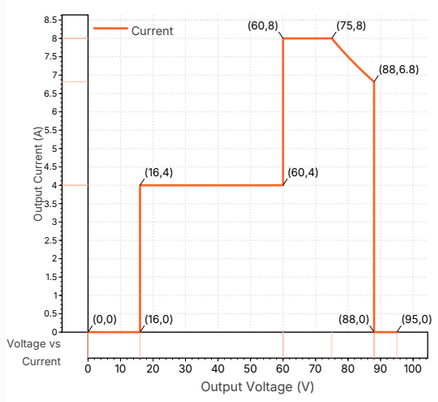

UIN VS POWER

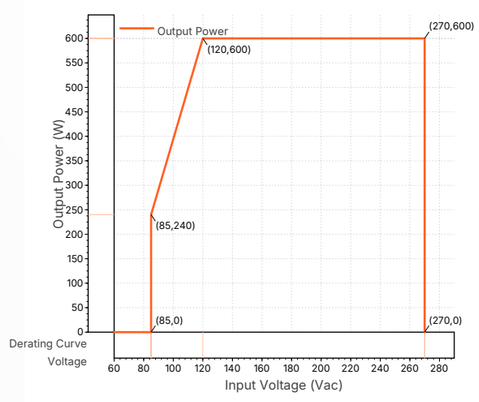

DIMENSIONS

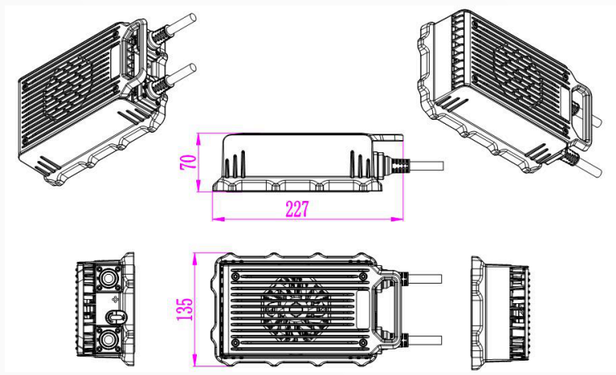

MECHANICAL

Dimensions (mm)	202*135*72 mm
IP Rating	IP65 (charger housing)
Weight	2.1 kg (4.6 lb)
Cooling Method	Forced air cooling
Number of Ports	2 Ports
Mounting Options	Portable and Onboard
Enclosure Type	Die Cast Aluminium
Connectors	Customizable input and output connectors, harness
Encapsulant	Silicone Potting Compound

ENVIRONMENTAL

Operating Temperature	-25°C~65°C
Storage Temperature	-40°C~95°C
Altitude	2000m
Vibration & Shock	IEC 60068-2
Audible Noise	<45dB at 1m
Relative Humidity	0~95%, Non-Condensing
Design Life	10 Years

REGULATORY

Certifications (North America): UL / CB / CE / FCC / KC / KCC / RCM / CEC / DOE / CP65 / ECE R10
IEC 61000-3-2/-3-3, IEC 61000-4-2/-4-3/-4-4/-4-5/ -4-6/-4-8/-4-11, IEC 61000-6-2/-6-3
IEC 61851-21-2 (CISPR 11), ISO 10605, ISO 11452-2/-4, IEC 60335-1/-2-29

Disclaimer: The information and specifications set out in this datasheet are provided for general reference purposes only and do not constitute a guarantee of performance or suitability for any particular application. Actual product performance may vary depending on the specific application, usage conditions, and environmental factors. All product specifications and related information are subject to change, modification, or withdrawal at any time without prior notice. The manufacturer assumes no liability arising from the use of this datasheet or reliance on the information contained herein. It is the responsibility of the system designer/integrator to validate the product in the target application and ensure compliance with all applicable standards and regulations.

Solterra Technologies Pvt Ltd
Ground Floor, 12/74, Site-IV, Sahibabad Industrial Area, Ghaziabad, UP, India 201010. Landline 0120-4129371 CIN: U34300UP2022PTC166574
www.solterratech.com
info@solterratech.com
skv@solterratech.com

Copyright Solterra Technologies Private Limited 2026 ©